Special Notice January 2021

It isn't often that The Seymour Lake Association (SLA) gets to make a defining decision about what we do to make our lake and environment better. The one we can best identify is when The Board and Beth Torpey submitted a proposal to the state to fund the program to stop milfoil infestation.

This program is now 21 years old and by any measure has been a success. So far we have stopped milfoil from coming into our lake unlike other unfortunate lakes in Vermont. Your generous donations have made this program work. We have been assisted by The Town of Morgan and the State who have also contributed. We have another such opportunity to make our community better and wish to solicit your help in making this possible.

David in his kayak on Seymour Lake

David Wieselmann, pictured above, has been a Seymour Laker for many years; but unfortunately suffered a mountain biking accident in 2010 when he incurred a serious spinal cord injury. It is relatively high up the spine at the upper part of his torso and this makes it very difficult to control those muscles so important for physical movement. Many spinal injuries you have heard of are from the waist down and while paralyzed below, these injuries do not affect the torso area and hence are less severe but are still, of course, debilitating.

David lives south of Boston to be near three facilities which help him with rehabilitation, but each weekend and many other days in summer, he returns to the lake of his love, Seymour, to pursue a long-time passion in one of the few physical efforts he can do, kayaking. David spends many hours on the lake in his kayak and is the leader of the VIP (Volunteer Invasive Patroller) Program of SLA. David trains and schedules our VIP Patrollers, as well as making inspections for possible invasive species himself. He gets reports from our patrollers and forwards them to SLA's Water Quality Committee. SLA and our lake are most fortunate to have David perform this most important work to keep Seymour Lake clean and milfoil free, for the benefit of all of us around the lake.

David's bus commute from Boston is long, but his mother picks him up in Littleton, NH and drives him to Seymour East to their summer camp. For the past many years, David has moved from his wheelchair to his kayak and back again with the help of about 20 neighbors whom he contacts to help him. This is accomplished with shear muscle power by lifting David from wheelchair to kayak and back again. There is more help in the summer, but in September and October, there are not as many neighbors around, so our proposed solution is a godsend. Like others with similar disabilities, David aims to be as independent as he can. This is his long-term goal and one of which his training and muscle improvement are focused. For years he has searched for a solution to accomplish this feat alone, but the unusualness of his disability does not lend itself to known solutions. Nothing has worked!

We have found a solution which requires building a special lift system designed by SLA members and built by Reno Gervais of Gervais Hardware in Island Pond. FLOE dock parts form the basis of the solution so David can lift and transfer himself using only a hand controller. Please see the drawings on the next page showing the structure and the sequence David will go through.

If you've met David you'll understand why people love to help him, and we need your help to complete this project. We hope you will join us to reach the financial goal of $12,000. Note that SLA is coordinating this effort only, and is not using any SLA funds.

The building process takes time so kindly return your donation by February 15. Please be as generous as you can and **make out your check to SLA. Send it to Jean McKenny, Treasurer, P.O. Box 156, Derby, VT 05829-0156. Indicate in the check's memo line as "David's Project"**

Most sincerely, SLA Board of Directors

The structure for David and the step by step procedure

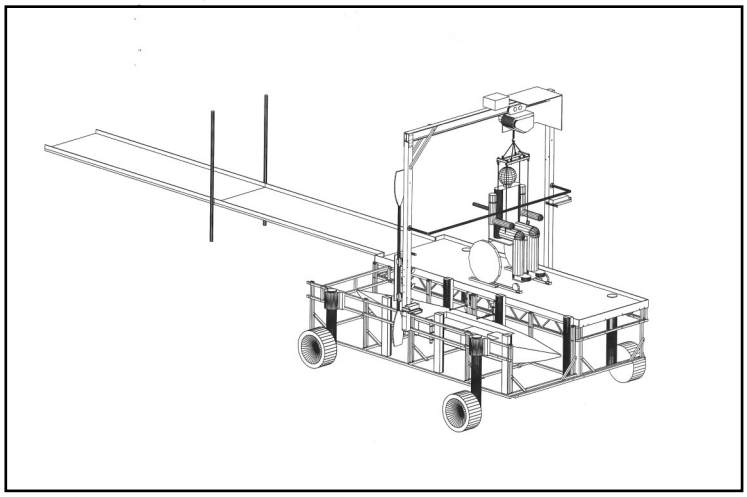

The picture to the left includes the existing dock, which David uses to access the new structure. He has used this for years and is comfortable driving his wheelchair from his house down to the beach where rubber pads make it easy for him to traverse the sand. Then onto the existing dock, which gets him to the new structure.

This drawing to the left shows the entire structure including parts underwater. The following simplified four diagrams show only the new structure and just that part above the water level. Note the location of David's paddle which is stored there when not in use.

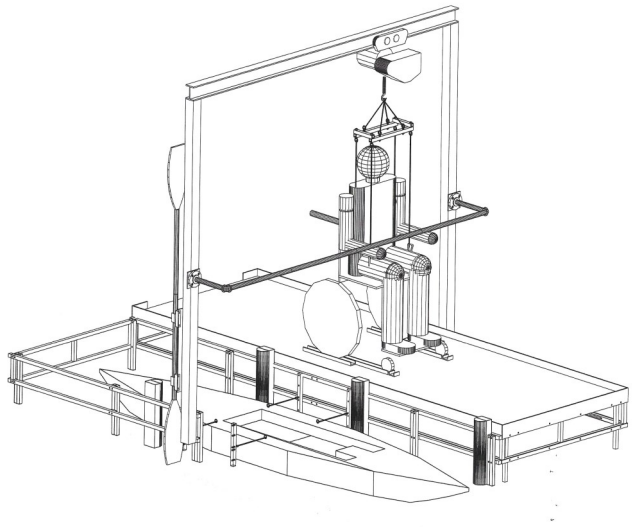

Step 1: David aligns his wheelchair directly under the hoist and attaches the 4 cables to his sling.

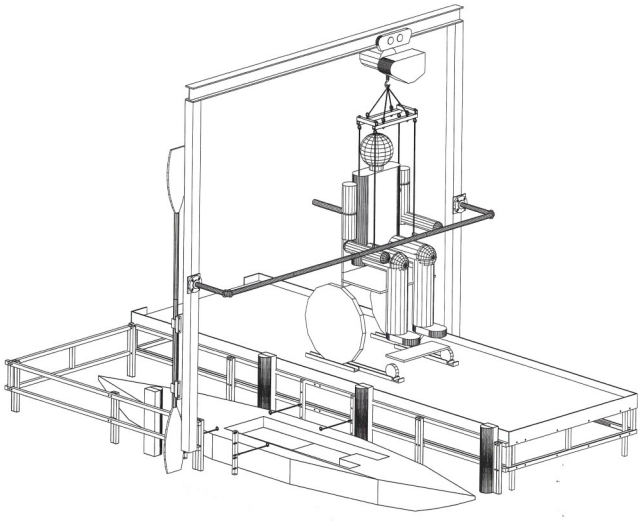

Step 2: David grasps the up/down controller and the hoist raises him 4 inches to clear the wheelchair seat.

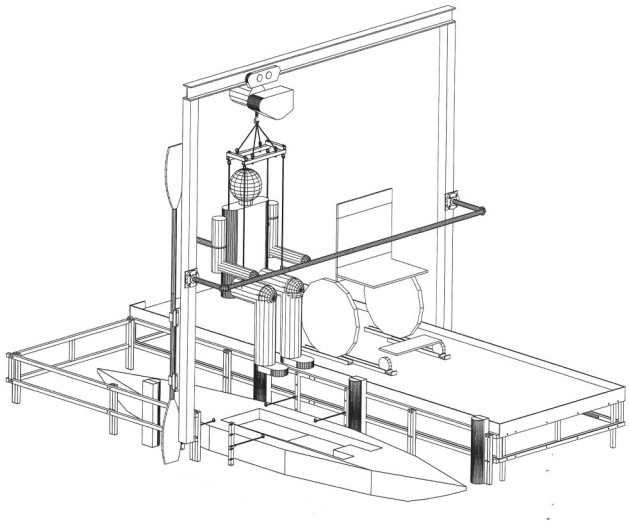

Step 3. With his hands David grabs the bar in front of him and pulls himself the 4 feet to directly over the kayak.

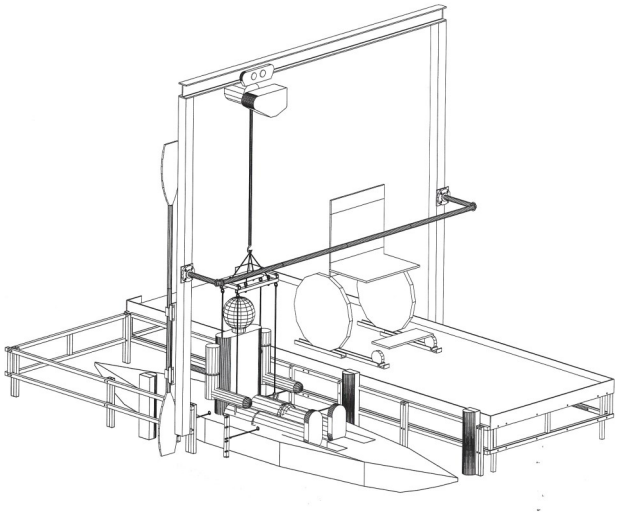

Step 4: David lowers himself into the kayak. He releases the sling from the overhang, detaches the kayak, and paddles out to Seymour. Returning is the reverse sequence.